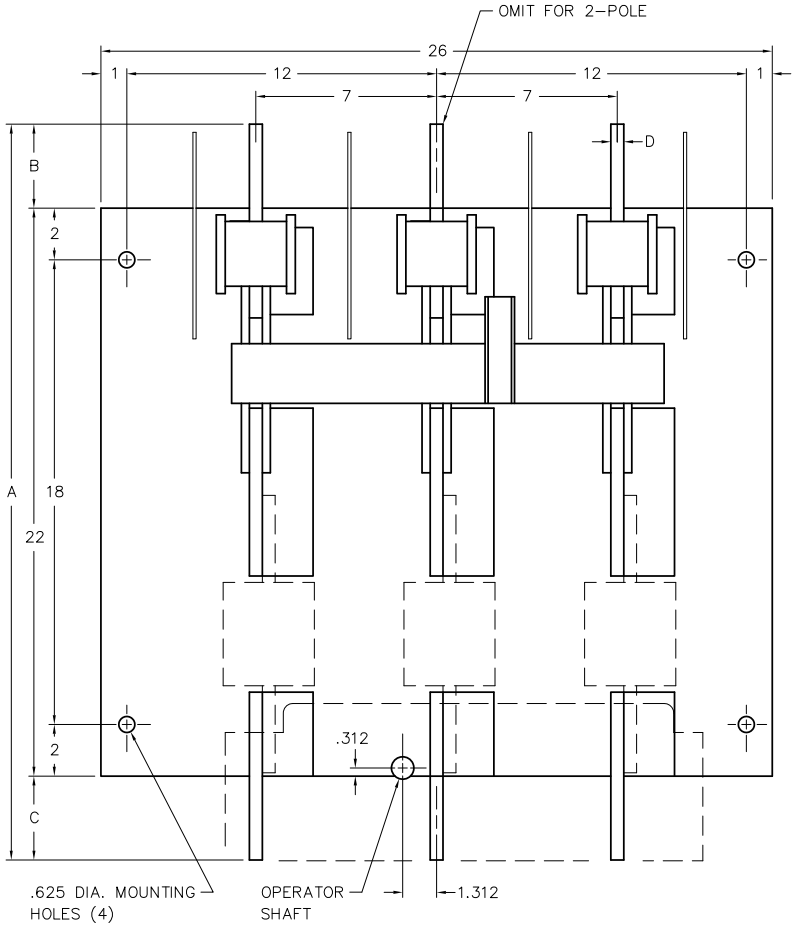

FRONT VIEW

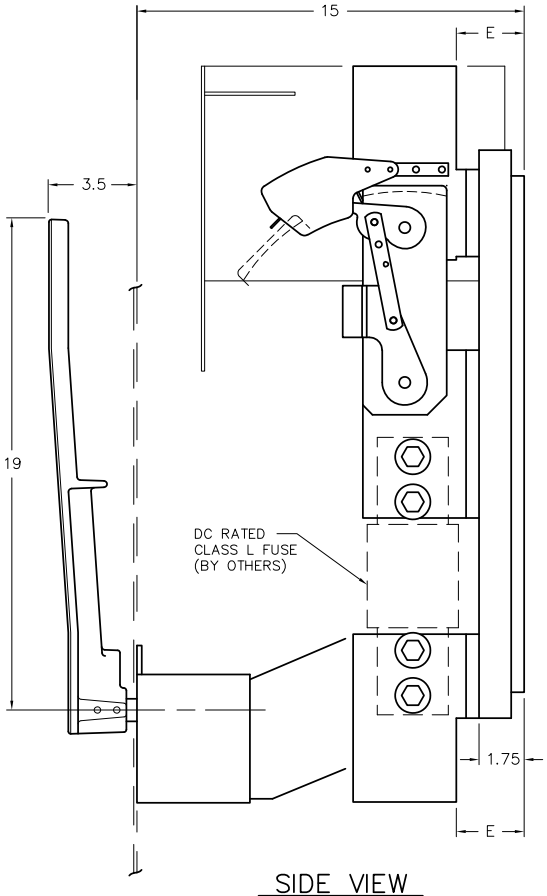

SIDE VIEW

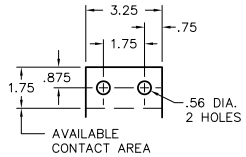

800 A. TERMINAL

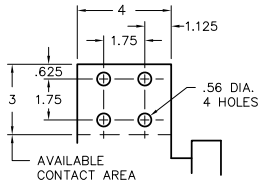

1200–2000 A. TERM.

VENTILATION

WHEN THE SWITCH IS TOTALLY ENCLOSED, VENTILATING LOUVERS MUST BE PROVIDED YIELDING A MINIMUM OPEN AREA OF "H" SQUARE INCHES NEAR THE TOP OF THE ENCLOSURE, AND "H" SQUARE INCHES NEAR THE BOTTOM OF THE ENCLOSURE.

	AMP	CATALOG NUMBER* 2–POLE	CATALOG NUMBER* 3–POLE	NET WT. (2–POLE)	A	B	C	D	E	H
600 VDC	800	**VLDC267**	**VLDC367**	107 LBS	25.75	2	1.75	.375	2.5	NONE
	1200	**VLDC268**	**VLDC368**	114 LBS	28.5	3.25	3.25	.375	2.5	NONE
	1600	**VLDC269**	**VLDC369**	116 LBS	28.5	3.25	3.25	.375	2.5	60 SQ. IN.
	2000	**VLDC2610**	**VLDC3610**	133 LBS	28.5	3.25	3.25	.5	2.625	60 SQ. IN.

* OPTIONAL SHUNT TRIP, ADD SUFFIX –ST

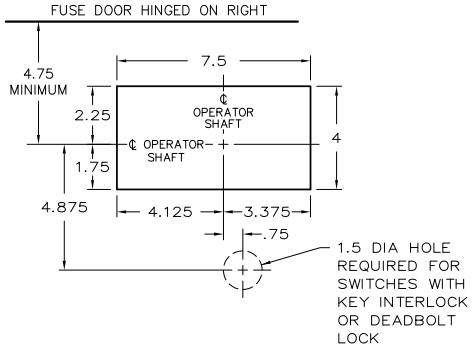

RECOMMENDED FRONT CUT–OUT

OPERATOR DETAILS

FOR OPERATOR DETAILS AND ALTERNATE FRONT CUT–OUTS, REFER TO THE FOLLOWING DRAWINGS:

O–1023A MANUAL OPERATOR
O–1090A SHUNT TRIP OPERATOR

KEY INTERLOCK

KEY INTERLOCK SPECIFICATIONS FOR SWITCHES EQUIPPED WITH KEY INTERLOCK PROVISIONS ARE:

.375 BOLT PROJECTION WHEN WITHDRAWN
– KIRK TYPE B
– SUPERIOR TYPE B6003

REV 3 6–8–12 JAE 3–POLE ADDED
REV 2 11–8–95 JAE NEW FRONT CUT–OUT, HANDLE STYLE & LOCATION REVISED
REV 1 7–28–94 JAE KEY INT CHANGED

SERIES VLDC

800–2000 AMP, 2&3 POLE, 600 VOLT DC
CLASS L FUSIBLE SWITCH

SCALE:	APPROVED BY:	DRAWN BY JAE
DATE: 7–21–92		REVISED 3

boltswitch, inc.
CRYSTAL LAKE, ILLINOIS 60014

DRAWING NUMBER
O–1521